MALE END VIEW

(LONG)

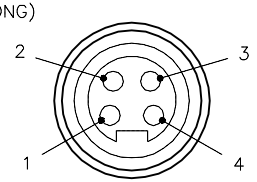

SPECIFICATIONS

CONTACT CARRIER MATERIAL/COLOR	PVC/NYLON, BLACK
GLAND MATERIAL/COLOR	NYLON/BLACK
CONTACT MATERIAL/PLATING	BRASS or COPPER/GOLD
COUPLING NUT MATERIAL/PLATING	BRASS/NICKEL
SEAL MATERIAL/COLOR	NITRILE/BLACK
RATED CURRENT [A]	UP TO 35.0 A
RATED VOLTAGE [V]	600 V
MAXIMUM WIRE SIZE	8 AWG
TERMINATION METHOD	SCREW TERMINAL
TEMPERATURE RATING	−40°C to +90°C (−40°F to +194°F)
PROTECTION CLASS	IP 67/NEMA 6P
CABLE GRIP RANGE	9.0mm [0.35"] to 26.0mm [1.02"]

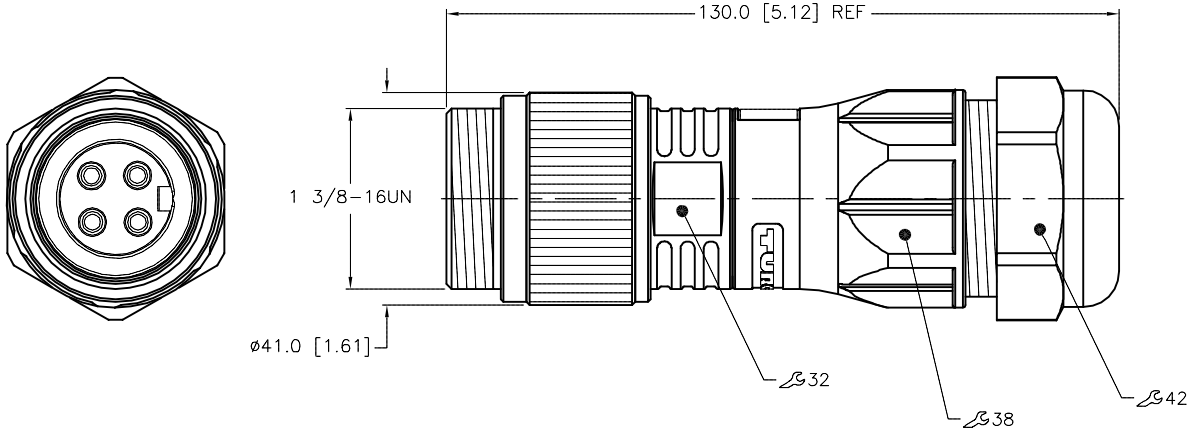

WIRE SIDE VIEW
OF CONTACT HOLDER
TO SHOW LABEL DETAILS

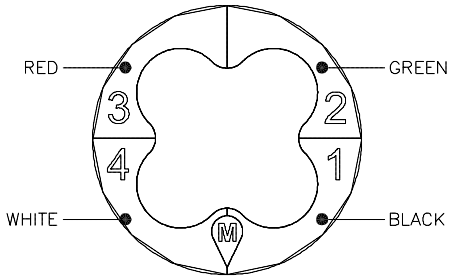

(SCALE 2:1)

CAUTION:
RISK OF ELECTRICAL SHOCK
DO NOT DISCONNECT UNDER LOAD

SOURCE DRAWING - FOR REFERENCE ONLY

REV	DESCRIPTION	BY	DATE	ECO NO.
C	UPDATE RATED CURRENT	RDS	04/22/20	75819

RELATED DOCUMENTS
1.
2.
3.
4.

3RD ANGLE PROJECTION

THIS DRAWING IS CONFIDENTIAL AND THE PROPERTY OF TURCK INC. USE OF THIS DOCUMENT WITHOUT WRITTEN PERMISSION IS PROHIBITED.

TURCK

3000 CAMPUS DRIVE
MINNEAPOLIS, MN 55441
1-800-544-7769
(763) 553-7300
(763) 553-0708 fax
www.turck.us

MATERIAL: SEE SPECIFICATIONS

FINISH: SEE SPECIFICATIONS

ALL DIMENSIONS DISPLAYED ON THIS DRAWING ARE FOR REFERENCE ONLY

CONTACT TURCK FOR MORE INFORMATION

DRFT: RWC | DATE: 09/10/09
APVD: | SCALE: 1=1.5

UNIT OF MEASUREMENT
MILLIMETER [INCH]
DO NOT SCALE THIS DRAWING

DESCRIPTION: GSDM 40-0

IDENTIFICATION NO.: U2-14826 | REV: C

FILE: U2-14826 | SHEET 1 OF 1

Approved 04/23/2020, work order #211890 by L.H.